Virginia Cooperative Extension

2006 PUBLICATION 424-053

Deep Tillage Prior to No-Till Corn: Research and Recommendations

Wade Thomason, Assistant Professor and Extension Grain Crops Specialist, Virginia Tech
Bobby Grisso, Professor and Extension Engineer, Virginia Tech
Keith Balderson, Extension Agent, Essex County
Paul Davis, Extension Agent, New Kent County
Sam Johnson, Extension Agent, Westmoreland County
Chris Lawrence NRCS State Agronomist
Matt Lewis, Extension Agent, Northumberland County
David Moore, Extension Agent, Middlesex County
Mark Alley W.G. Wysor Professor of Agriculture and Soil Fertility Specialist, Virginia Tech

Soil compaction is a manageable factor that can limit grain or silage yield on many Virginia soils. Corn plants growing on compacted areas are often stunted and have slower root penetration rates (Figure 1). They may exhibit uneven emergence, slow early-season growth, and premature drought stress when grown in these areas. Compaction is created when soil particles are pressed together, reducing the pore space between soil particles and pushing out the air that normally is located there. In a typical soil, air and water make up about 50 percent of the total soil volume while soil particles make up the other 50 percent. However, this can change dramatically as soil particles are pressed together and the air is squeezed out. Generally, the largest spaces are eliminated first, taking away the path of least resistance for air and water movement as well as for root penetration. Soils with a mixture of textures (some sand, silt, and clay) are more susceptible to compaction than those with homogenous texture, when exposed to the same compactive force.

Figure 1. Corn root growth limited by soil compaction (left) and healthy roots from noncompacted soils (right).

Virginia Tech
VIRGINIA POLYTECHNIC INSTITUTE AND STATE UNIVERSITY

www.ext.vt.edu

Produced by Agriculture and Extension Communications, Virginia Tech

Virginia Cooperative Extension programs and employment are open to all, regardless of race, color, national origin, sex, religion, age, disability, political beliefs, sexual orientation, or marital or family status. An equal opportunity/affirmative action employer. Issued in furtherance of Cooperative Extension work, Virginia Polytechnic Institute and State University, Virginia State University, and the U.S. Department of Agriculture cooperating. Mark A. McCann, Interim Director, Virginia Cooperative Extension, Virginia Tech, Blacksburg; Clinton V. Turner, Interim Administrator, 1890 Extension Program, Virginia State, Petersburg.
VT/0106/W/424053

VIRGINIA STATE UNIVERSITY

Soil compaction has three main causes: 1) Equipment and animal traffic, 2) Tillage, and 3) Rainfall.

Rainfall intensity is out of your hands except that surface residue protects the soil from the full impact of the drops.

Compaction is caused by heavy equipment and the mass exerted by mass in a concentrated area, such as from the bottom edge of a disk, or when tillage and/or traffic occur on a soil that is too wet. Heavier tractors, combines, and other equipment have contributed to increased compaction problems even when larger tires are used. The general consensus is that shallow compaction is related to the pressure at the soil-tire interface while deep compaction is mostly related to the total axle load on the soil.

Shallow Compaction

Shallow compaction is any compaction occurring in the normal tillage zone. Shallow compaction problems are usually only temporary as compaction is generally removed with subsequent tillage operations. Actions that result in shallow compaction should be avoided, especially at planting time in conventional tillage and at all times in conservation tillage.

Shallow compaction is related to the pressure applied to the surface of the soil. A 3,000-pound load supported by a tire with a 200 square-inch footprint exerts an average soil pressure at the surface of 15 psi. If the load was doubled to 6,000 pounds and the footprint doubled to 400 square inches, either with the use of another identical dual tire or a larger size single tire, the average soil pressure would still be 15 psi. Surface pressure on the soil can be controlled as loads increase through the use of duals or larger single tires.

Deep Compaction

While shallow soil pressure is directly related to pressure placed on the soil by the applied load, pressure deeper in the soil is mostly affected by the total load on the soil. Therefore, deep compaction, or compaction below the normal tillage zone, is mostly affected by the maximum axle load. Axle load is not reduced by distributing the weight between more tires on the same axle or using tires with larger footprints.

Deep compaction is generally a long-term problem unless it is removed by special deep tillage operations. Freeze-thaw and wet-dry cycles have only a minimal effect on reducing deep compaction and require many years to have any significant effect.

Tips for Reducing Compaction by Machinery

Reduce tractor weight. Use lighter draft implements at higher field speeds. This should reduce both shallow and deep compaction.

Consider alternative tractor-chassis configurations. Four-wheel drive and mechanical front-wheel drive tractors can have significantly lower axle loads than two-wheel drive tractors of the same horsepower. This should reduce both shallow and deep compaction. Do not use the extra traction capabilities of all-wheel drive to operate on wet fields; it increases the potential for compaction.

Use radial tires. Radial tires have a larger footprint and can operate with less ballast. This should reduce both shallow and deep compaction. Road tires are designed to operate at higher pressure and the sidewalls do not flex as much as ag tires. They are not designed for field use.

Use duals or large tires when appropriate. Large tires and duals should reduce shallow compaction, but do not significantly reduce deep compaction.

Remove extra weight when it is not needed for traction. Unneeded weight increases the potential for deep compaction and increases fuel consumption.

Use controlled traffic lanes. The first pass of a vehicle on tilled soil can cause 70 to 80 percent of the wheel compaction. If trafficked lanes are followed by additional traffic with lighter or similar loads, little additional compaction occurs.

General Tips for Reducing Soil Compaction

Stay off wet soils. Perform field operations in the driest fields first, allowing more drying time for fields that tend to remain wet. Reducing axle load and increasing tire size help reduce compaction on susceptible fields.

Reduce tillage. Management systems with a reduced number of tillage operations leave greater amounts of residue on the soil surface. Surface residue helps prevent surface sealing by intercepting raindrops. Surface sealing is a form of compaction that increases runoff and forces emerging seedlings to expend substantial energy to break through the crust. Weak, disease-prone seedlings can result.

Add organic matter to the soil. Crop residue, animal manure, sludge, and green-manure crops all provide organic matter that can promote good soil structure and decrease bulk density. The soil resulting from these additions will be more resistant to compaction by tillage or wheel traffic.

Rotate crops. Crop rotations – including perennials such as alfalfa, clover, and grass – result in less compact soils. This effect stems from (1) absence of tillage operations after seeding, (2) field operations that are typically limited to hay harvesting when the soil is dry, and (3) deeper rooting that keeps the soil more porous and removes large amounts of water, thus promoting soil drying and cracking.

Alter the depth of tillage. If you use tillage, it is important to till deeper in a dry year to break up the "tillage pan." In subsequent years, vary the tillage depth to minimize development of a compacted zone.

Control wheel traffic. Compaction can be localized if all tires are restricted to the same tracks or row middles. Using tilling, planting, spraying, and harvesting equipment that has the same wheel spacing makes it easier to control traffic that causes compaction. Wheel traffic is easiest to control in conservation-tillage and no-tillage systems.

Plan harvest strategies. Combines, grain carts, and grain and silage trucks are among the heaviest equipment used on a field. Under wet field conditions, you might avoid filling the combine to capacity and can keep grain carts and trucks off the field by emptying the combine at the end of the field. If you use carts and trucks to unload in the field, keep the cart and truck tires in the combine tracks of the previous pass. When transporting equipment from the field, create and use only one path to the extent possible.

Use deep tillage when compaction limits crop yields. Visually inspect crop roots to help you determine the depth and extent of compaction. The subsoil or chisel plow are the most common tools used to break compaction (Figure 2). If you perform deep tillage, you should consider some of the strategies given above to maximize the effectiveness and longevity of your operation.

Manage livestock grazing. Graze livestock on cropland only when the soil is dry or frozen. Use rotational grazing and adjust stocking rates to match soil and forage conditions. Remember to subtract the residue eaten by animals when estimating the residue cover required to prevent erosion.

Figure 2. Deep tillage using a no-till ripper. Note the minor soil disturbance and large amount of residue remaining on the soil surface.

Virginia Research

Combating soil compaction in no-till fields presents a unique challenge because of the need to minimize soil disturbance. To this end, producers have adopted the use of an in-line or no-till ripper. These tools use a rolling coulter followed by a straight shank with various points and performs tillage at depths of 12 to 18 inches while maintaining a smooth soil surface and high crop-residue levels (Figure 3).

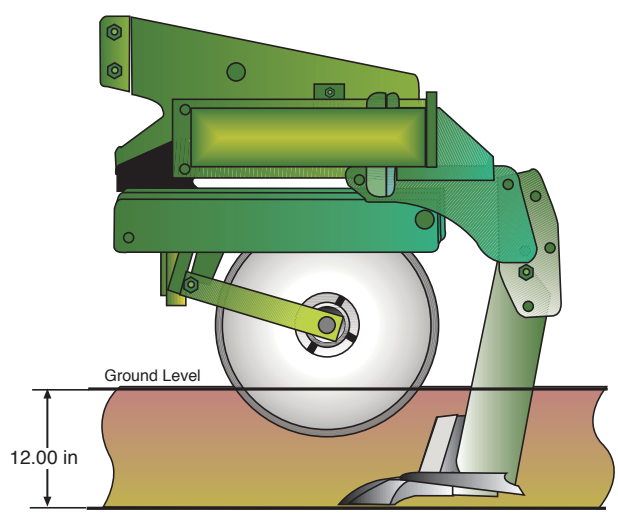

Figure 3. End view schematic of no-till ripper coulter and shank (courtesy of CNH America, LLC).

Virginia Cooperative Extension agents in eastern Virginia have evaluated the effect of deep tillage, using a no-till ripper, for corn production in over 35 fields (Table 1). They determined presence or absence of a compacted layer at a site by using a soil penetrometer. In some cases, ripping when there was a compacted layer resulted in a yield increase, but not always. Overall, deep tillage increased corn yields by slightly less than five bushels per acre. However, yield response to deep tillage at individual sites ranged from an increase of 29 bushels per acre to a decrease of 22 bushels per acre. These results indicate that the likelihood of an economic response to deep tillage is dependent on soil type and conditions at an individual site and that generalized recommendations are inappropriate.

A consistent yield increase from deep tillage has been observed for end rows and areas that receive excess traffic. Deep tillage ahead of corn that follows wheat with heavy disking is another situation where yield increases often occur.

Table 1. Corn yield response to deep tillage by site. The shaded area indicates fields where the yield response was likely inadequate to pay for the tillage cost.

County	Soil type	Compacted Layer	Yield change due to ripping, bu/A
New Kent	Contetoe	Y	-22
Westmoreland	State	Y	-13
New Kent	Altavista		-7
Essex	Tetotum		-4
New Kent	Altavista		-2
New Kent	Contotoe	N	-1
Essex	-		-1
King & Queen	Emporia		0
Essex	Tetotum	Y	1
Middlesex	Suffolk	N	3
Essex	-		3
New Kent	Kempsville		3
Gloucester	-		3
King & Queen	Tetotum	N	3
New Kent	Pamunkey		5
Middlesex	Eunola	N	5
Westmoreland	State	Y	7
New Kent	Kempsville	N	8
King & Queen	Tetotum	N	8
Essex	-		9
New Kent	Altavista	N	11
Essex	Kempsville		11
Middlesex	Suffolk	N	12
Essex	Atlee		12
Essex	-		14
New Kent	Kempsville	N	16
New Kent	Altavista	Y	17
New Kent	Kempsville	Y	29
Average			**5**

Ripping Response

Anticipating the likelihood of response to deep tillage will require an understanding of soil type and past management. Penetrometer readings alone are not sufficient for diagnosing when a site will respond to deep tillage. The history of the field as it relates to soil type, amount of known compaction, size and type of equipment, and amount of traffic when wet can offer much insight. Table 1 illustrates corn yield response to deep tillage for the cases studies in Virginia.

Soil type is a major factor in determining likelihood of response to deep tillage. Soils that tend to compact due to physical characteristics are more likely to show a corn yield increase. A listing of Coastal Plain soils that are most and least likely to respond to deep tillage is shown in Table 2. The depth of the compacted layer is also important. If the compacted layer is less than four inches from the surface, natural occurrences such as freeze-thaw and wetting and drying will likely alleviate the problem. At this depth, there is also no need to perform a deep tillage operation as a shallow chisel plowing will break up the compacted zone.

Coastal plain soils that are responsive to deep tillage often exhibit similar characteristics. They tend to have 10 to 15 or more inches of topsoil above a more clayey layer. Tillage that breaks compaction in the surface layer allows access to water deeper in the profile, down to the clay layer. Non-responsive soils either tend to be sandy throughout the profile, or at least to greater depths, or they tend to be relatively poorly drained such that access to water from deeper in the profile is not advantageous. Response to deep ripping in Piedmont and Ridge and Valley soils tends to depend more directly on the presence and degree of compaction than on particular soil characteristics.

Finally, understanding what is below the compacted layer is important. If the water holding capacity of the soil below the compacted layer is extremely low, as would be the case with a very sandy or gravelly layer, all deep tillage may do is allow precious water to escape from the soil profile.

The effectiveness of deep tillage will depend heavily on timing of ripping. Dry soils tend to fracture and the compacted zone breaks much more effectively than those that are wet. Deep tillage that occurs when soils are wet can also create vertically compacted areas due to side smearing. High field traffic volume after tillage and prior to planting can negate any potential positive effects of deep tillage. Avoid excess field traffic prior to planting.

Soils under long-term no tillage production exhibit improved soil structure over time and become more resistant to compaction. In some instances, soils that once compacted readily and responded to deep tillage no longer do so because of long term improvements in soil structure.

Table 2. Coastal Plain soils most and least likely to respond to deep tillage based on texture, subsoil depth, and drainage.

Most Likely	Least Likely
Kempsville	Tarboro
Bojac	Eulonia
Wickham	Eunola
Emporia	Conetoe
State	Tomotley
Altavista	Slagle
Suffolk	Daleville
Rumford	Myatt
Tetotum	Seabrook

The Final Decision

In summary, you should take extra care in managing highly compactable soils. Avoid compaction-causing operations such as operating on wet soils, using a grain cart to unload on-the-go, and excessive weight on tractors and equipment. Perform deep tillage to alleviate compaction only during dry soil conditions in order to gain the most benefit. It is important to know the extent of compaction as it pertains to both location within the field and depth. Not all soils exhibit a significant corn-yield response to deep tillage, even when a compacted layer exists. If compaction is a problem, deep tillage can be a good management decision.

As demonstrated in extensive on-farm research in the Coastal Plain, corn yield response to deep tillage is highly site specific. While it is important to understand soil compaction and its impact on corn yield for an individual field, it is also crucial to understand the cost (in time and money) of alleviating compaction on **YOUR** farm.

- Know how much it costs to own and operate **YOUR** ripper.
- Set up plots with your local extension agent or on your own to see what deep tillage is doing for **YOUR** yields.
- Calculate whether deep tillage is helping or hurting **YOUR** bottom line.